Replacing an Anden A710 with a Anden A711

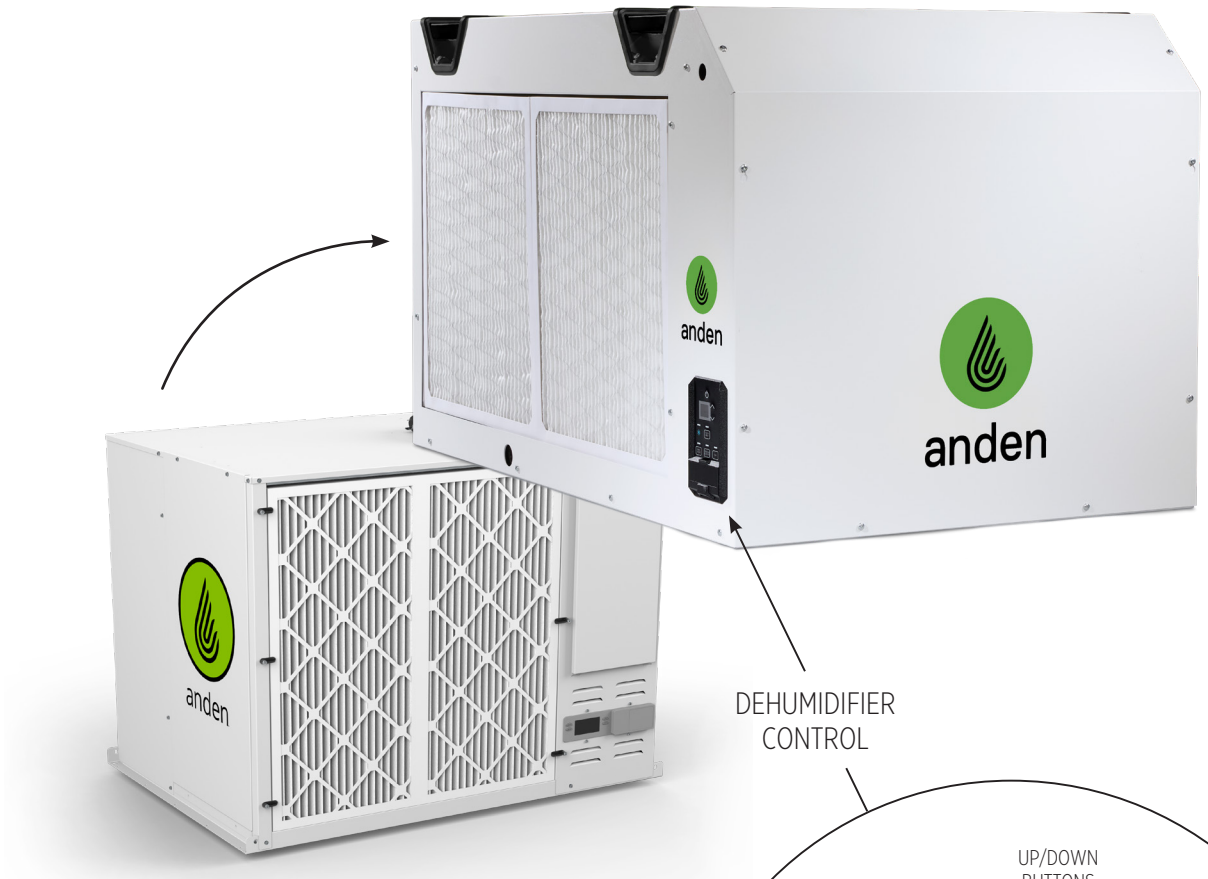

DEHUMIDIFIER CONTROL

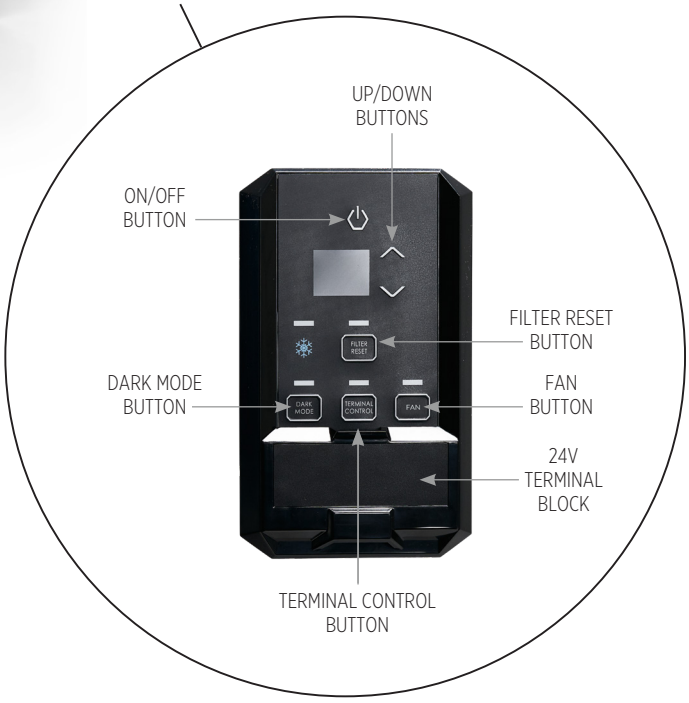

Intertek

3 YEAR LIMITED WARRANTY*

USA Designed & Assembled in Wisconsin

READ AND SAVE THESE INSTRUCTIONS

OVERVIEW

When replacing an Anden A710 with a new Anden A711 there are some installation details to consider. Although the A711 is similar in size it is not a drop in replacements. This document will review these differences to prevent installation errors. Here are the topics:

- Control Wiring
- A77 Controller
- Cord Change
- Drain trap
- Hanging method

CONTROL WIRING

The on-board control for the A711 uses a different wiring configuration and control voltage than the A710. Rewiring of any daisy chained units will be needed.

- A711 cannot be the first or middle unit on the chain. Must be at the end of the chain as shown.
- Additional A711's can be added at the end of the chain using the DEHUM and 24V Com terminals.
- Do not carry over the 24VAC terminal on subsequent A711's

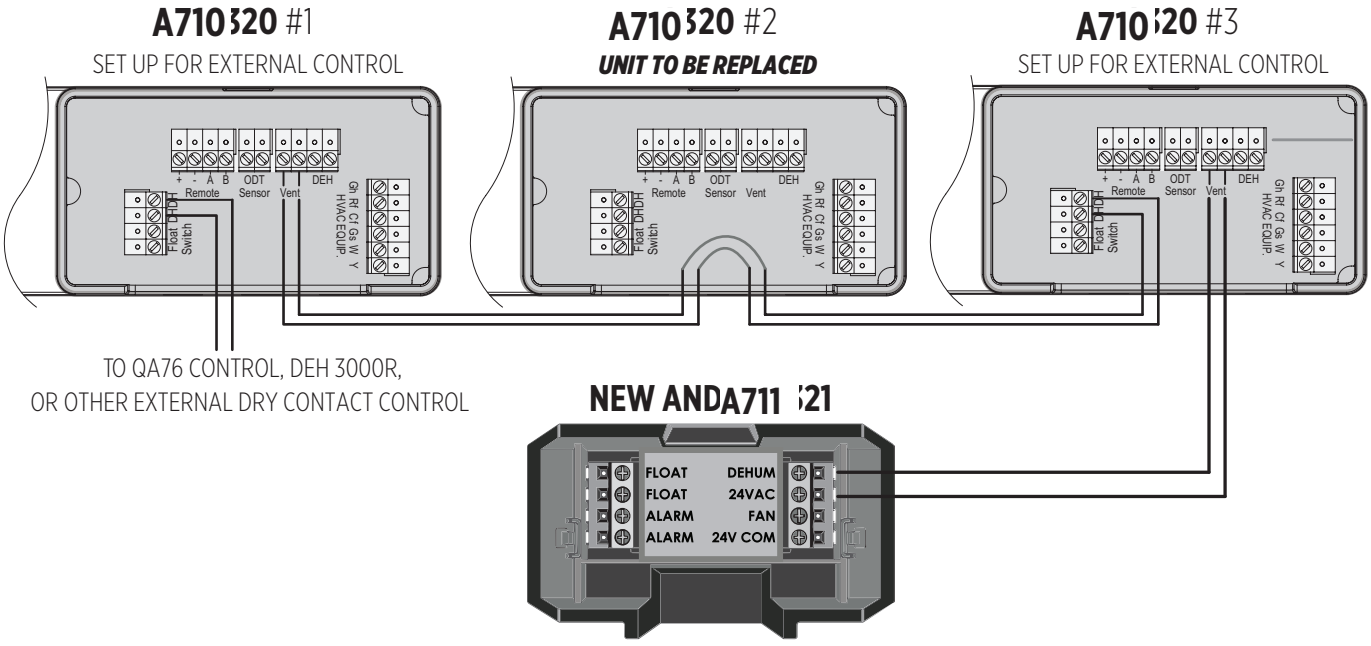

A77 CONTROLLER

The Anden A710 came with a A77 wired controller. This controller will not work directly with the new Anden A711. If the A77 was used, replace it with the QA76 control, or a controller that uses 24 VAC or Dry contacts will be required to run the unit if remote operation is wanted.

CORD CHANGE

The older Anden 710 models used twist lock 30amp cords in both 208-240 volt and 277-volt models. The new more efficient Anden 711 models use the same cords. No modification required.

DRAIN TRAP

The Anden A711 does not come with a drain trap like the Anden A710 but still requires a trap for best operation. Using the Anden A710 trap on the Anden A711 is possible with some pipe modifications.

Condensate Water Removal:

A drain trap is recommended upon installation. Condensate drains by gravity via the drain port. Use 3/4" male NPT PVC pipe. An optional condensate pump kit may be installed if a lift is required to dispose of the condensate.

Follow Diagram:

- H: 4"
- J: 2"
- L: 6.75"

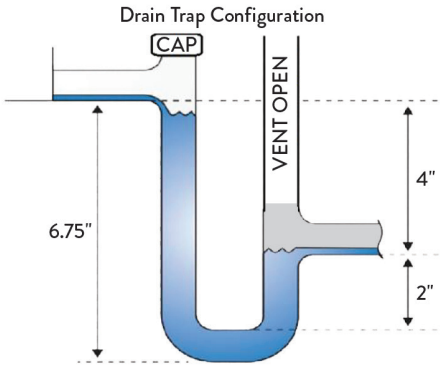

Vent:

- Place vent after the trap.
- Vent should be open.
- Height of vent should be higher than drain outlet.

Cap:

- A clean out can be placed before trap but must be sealed with a cap.

Drain Line:

- Drain line should go in a downward slope toward the drain.
- 1/4" drop her foot.

HANGING METHOD

The Aden A710 and A711 have different mounting locations for hanging the unit. Use 2 pieces of Unistrut to adapt the Anden A710's location to the Anden A711.

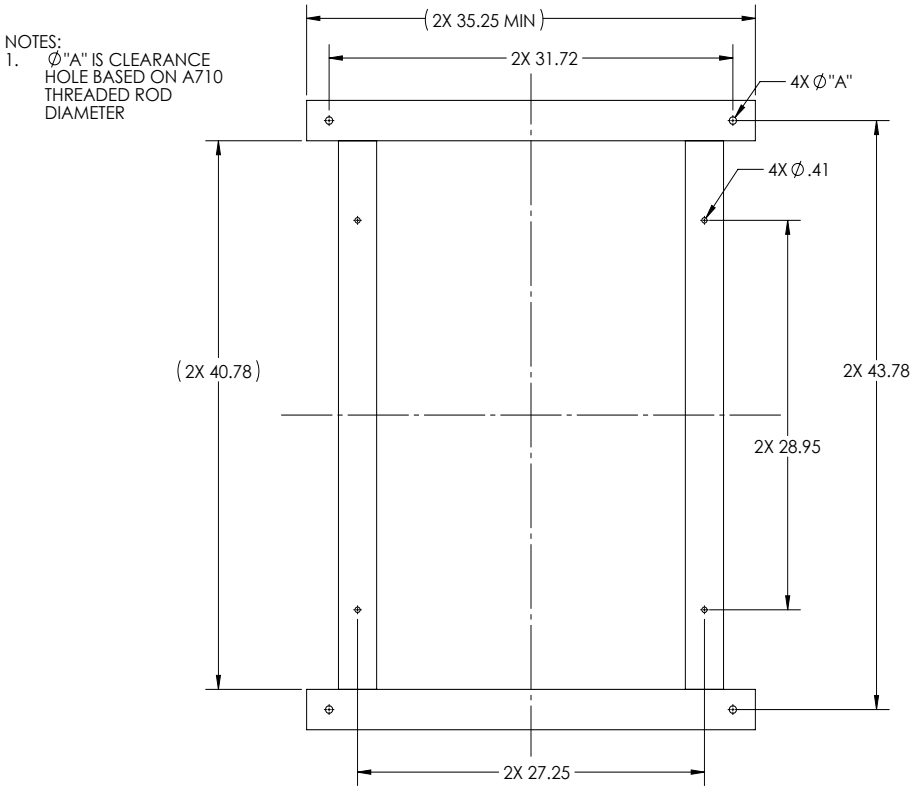



anden.com ©2026 Anden.