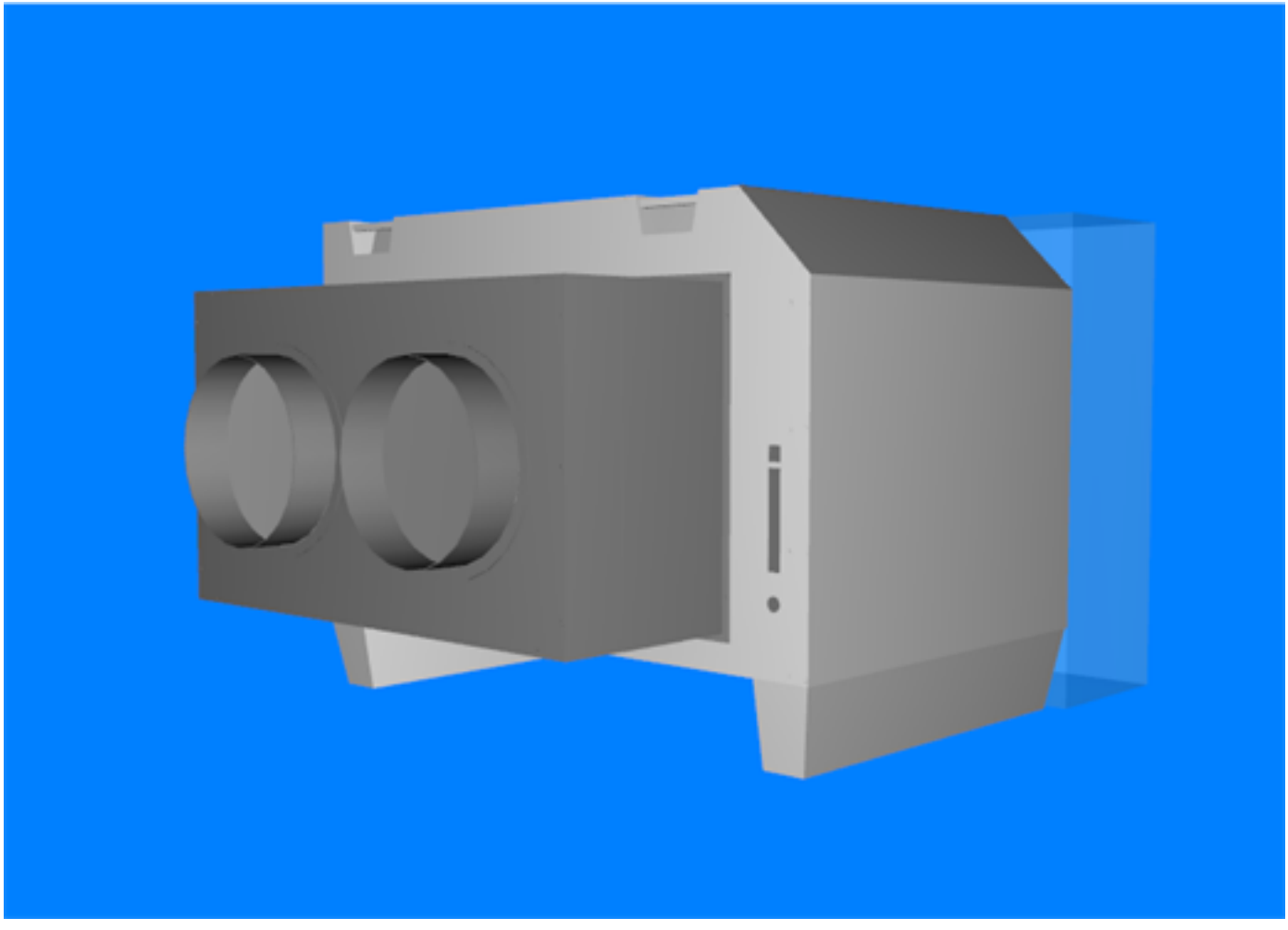3D INTERACTIVE MODEL