HI-E Dry Vehere

Installation, Operation and Maintenance Instructions

– Read and Save These Instructions –

This manual is provided to acquaint you with the humidity control device so that installation, operation and maintenance can proceed successfully. Ultimate satisfaction depends on the quality of installation and a thorough understanding of this equipment. The humidity control device is built around tested engineering principles and has passed a thorough inspection for quality of workmanship and function.

The Vehere with FOCUS™ Technology is... Performance, Reliability & Comfort

The Vehere utilizes technology, which dramatically improves performance, product reliability and comfort.

Performance - The Vehere's innovative heat transfer technology offers our customers...

"HI-Efficiency" - A dehumidifier resulting in a compact refrigeration system requiring less electric consumption.

This ensures the use of a standard 20 Amp electrical outlet and LOW OPERATING COSTS!

"HI-Capacity" - Vehere's passive heat transfer process allows the removal of more than 190 pints per day! (80°F, 60% RH). That's two- three times more water removal per kilowatt-hour of electricity than conventional dehumidifiers.

Compact - The Vehere's stainless steel enclosure is corrosion resistant with a built-in fan for low noise operation. The Vehere features a cabinet mounted or remotely located control, easy-roll casters, and the highest dehumidification capacity available in it's class.

Reliability - Our compact design uses less refrigerant, which reduces our cost and improves reliability. The Vehere's HI-Efficiency operation can save thousands of dollars annually.

Comfort - The Vehere provides airflows up to 540 CFM (cubic feet/minute) of Dry Air. This airflow helps reduce foggy windows, mold, mildew and condensate... all reduced to increase indoor occupant comfort!

Environmentally friendly R410A refrigerant.

The HI-E DRY Vehere Pool & Spa Humidity Controller featuring FOCUS™ Technology is the industries most efficient, durable and economic product for controlling moisture related problems associated with indoor pools, whirlpools, hot tubs, and therapy/lap pools.

Vehere delivers comfort and solves:

- Chemical Odors
- Foggy Windows
- Mold & Mildew
- High Humidity Level
- Condensate and Structural Moisture Problems

QUEST

Therma-Stor® LLC
Driven by performance. Powered by design.™

4201 Lien Rd.
Madison, WI 53704
www.QuestProtect.com

Toll-Free 1-800-533-7533
sales@QuestProtect.com

Table of Contents

Precautions 3
1. Intended Application for Vehere 4
2. Specifications & Capacities 4
2.1 Vehere Diagram 5
3. Installation 5
3.1 Location 5
3.1A Improper Installation 5
3.1B In humid area, no ducting 5
3.1C In humid area, duct inlet and/or outlet 6
3.1D In remote area, duct inlet & outlet 6
3.2 Mounting the Humidity Sensor/Controller 7
3.3 Electrical Requirements 7
3.4 Condensate Removal 7
3.5 Ducting 8
3.5A Ducting kit 8
3.5B Ducting for Dehumidification 8
4. Operation 9
4.1 Humidity Control 9
4.2 Humidity Control Adjustment 9
4.3 Fan Switch 9
4.4 Automatic Defrost Control 10
4.5 Automatic Low Pressure Control 10
5. Ventilation 10
5.1 Ventilation Recommendations 10
6. Maintenance 10
6.1 Air Filter 10
7. Service 10
7.1 Technical Description 10
7.2 Troubleshooting 11
7.3 Refrigerant Charging 12
7.4 Blower Replacement 12
7.5 Relay 13
8. Vehere Accessories 13
9. Vehere Electrical Wiring Diagram 13
10. Service Parts 14
11. Warranty 15

Safety Precautions

Read these installation, operation and service instructions carefully before installing and using this unit. Proper adherence to these instructions is essential to obtain maximum benefit from your Vehere pool & spa humidity controller.

READ AND SAVE THESE INSTRUCTIONS

- If used near a pool or spa, be certain there is NO chance the unit could roll into the water or be splashed and that it is plugged into a GROUND FAULT INTERRUPTER.
- DO NOT use the Vehere as a bench or table.
- Avoid discharging the exhaust directly at people or pets.

1. Intended Application

The intended application for the Vehere is as a pool & spa area humidity sensing controller applied either as a free-standing device directly in the pool area or operated remotely to provide dehumidified air to the pool or spa area using optional ducting and remotely mounting the humidity controller. The Vehere high efficiency dehumidifier utilizes refrigeration to cool an incoming air stream below its dewpoint as it passes through an evaporator coil. This cooling results in the removal of moisture (latent heat). The cooled and dried air is used to pre-cool the incoming air stream resulting in up to a 200 percent increase in overall efficiency.

2. Specifications

Part Number	4030050
Electrical:	110-120 VAC, 12.0 Amps, grounded (7′ power cord included)
Compressor:	LRA: 63 Amps
Capacity:	192 pints/day @ 80°F, 60% RH
Energy Factor:	2.79 L/kWh
Air Flow:	540 CFM without external ducting
	510 CFM @ .15 IWG external static
Refrigerant Charge:	2 lbs., 8 oz. R410a
Optional Duct Connections:	12″ round inlet & outlet
Size (w/o duct collars):	36.5″ Long x 19″ Wide x 40″ High
Weight:	180 lbs.
Controller Accuracy:	+/- 5% RH @ 72°F

Capacities

The Vehere is designed to control humidity for indoor pool (spa, hot tub) areas. It consists of a controller, dehumidifying cooling system, filter, fan and delivers the following dehumidification capacities:

Air Temp/Relative Humidity	Lbs./Hour	Lbs./Day
82°F/60%RH*	8.67	208
80°F/60%RH	8.32	200

Air Temp/Relative Humidity	Pints/Hour	Pints/Day
82°F/60%RH*	8.33	200
80°F/60%RH	8.00	192

Air Temp/Relative Humidity	BTUs/Hour	KWH/Day (derived)
82°F/60%RH*	13,668	35.71
80°F/60%RH	13,299	34.56

*ASHRAE Recommended Conditions

2.1 Vehere Diagram

A - Air Intake

B - Humidity Sensor/Control

C - Filters

D - Air Exhaust

E - Fan Switch

F - Power Cord

G - Drain Hose

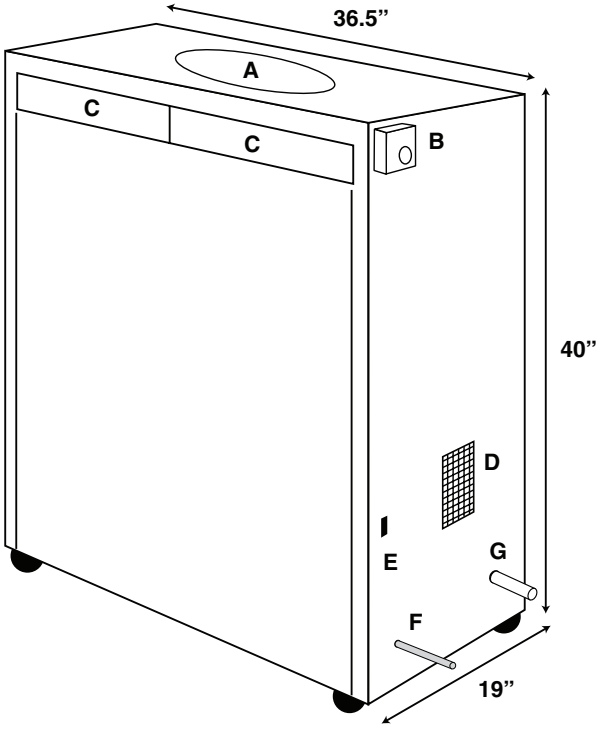

3. Installation Options

3.1 Location

The Vehere can be installed in a variety of locations to meet the owner’s needs; other considerations include:

1. Providing access to a 115 VAC power outlet (7′ power cord is provided).
2. Locating near a floor or other suitable drain (4′ drain hose included).

3.1A Improper Installation

Do not install the Vehere with the exhaust of the unit within 3’ of a wall or obstruction. Do not place the unit near open water. (See Fig. 2)

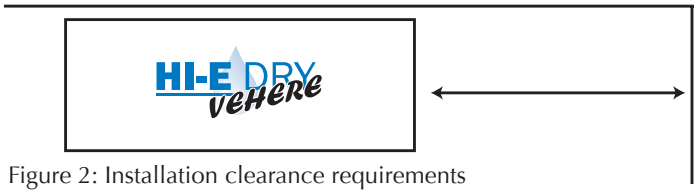

Figure 2: Installation clearance requirements

3.1B In Humid Area, No Ducting

The simplest installation is to place the Vehere in the pool area with no ducting. The Vehere must be at least 3′ from walls and other air obstructions, at the return and supply sides of the Vehere. (See Figure 3)

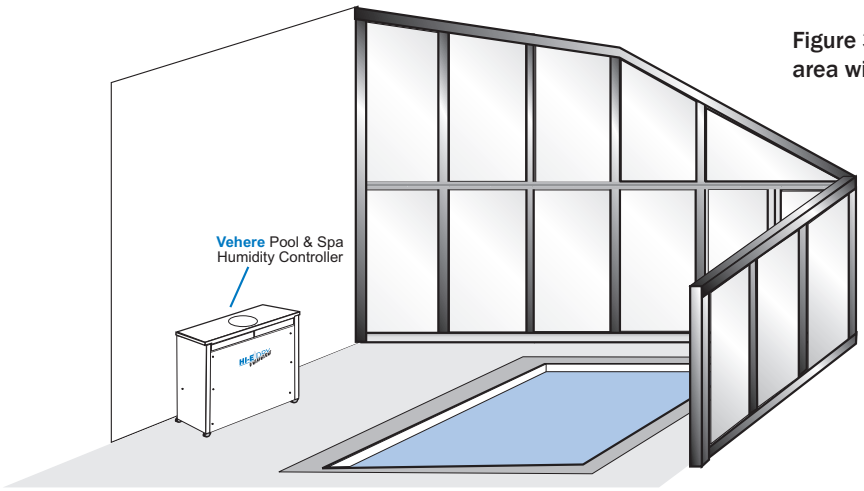

Figure 3: Installation in humid area with no ducting

3.1C In Humid Area, Duct Inlet and/or Outlet

If the pool room is very large or has high ceilings, dehumidification can be improved by adding an inlet and/or outlet duct to circulate and destratify stagnant areas. Add inlet or outlet ducting to create flow across the area's greatest length. For areas with ceilings higher than 12', use an inlet duct to draw warm, moist air from near the ceiling. See section 4.5 for attaching duct collars & ducting. (See Fig. 4)

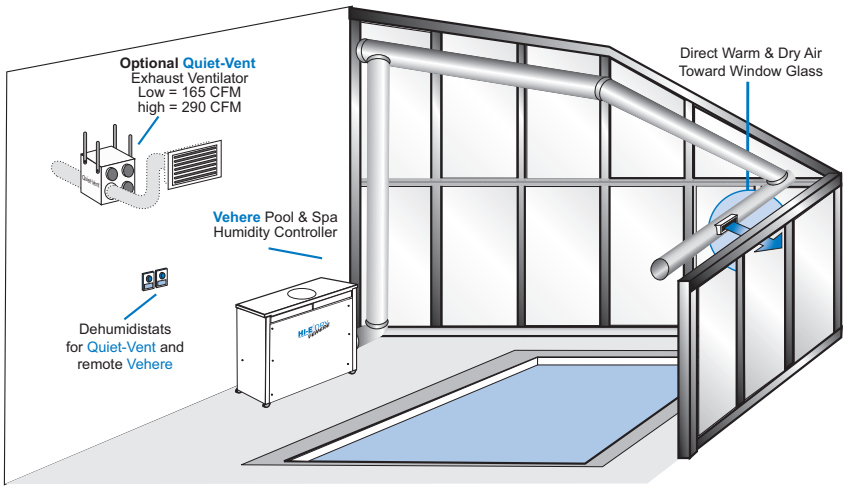

Figure 4: Installation in humid area with ducting.

3.1D In Remote Area, Duct Inlet & Outlet

It is often desirable, to install the Vehere in an adjacent equipment room or unfinished area. Air is then transferred between the humid room and the unit via ducting. Remotely mount the Vehere humidity control in the humid room and wire to the Vehere. Local electrical codes must be followed when wiring the control. Refer to the "Mounting the Humidity Sensor/Controller" section which follows. (See Fig. 5)

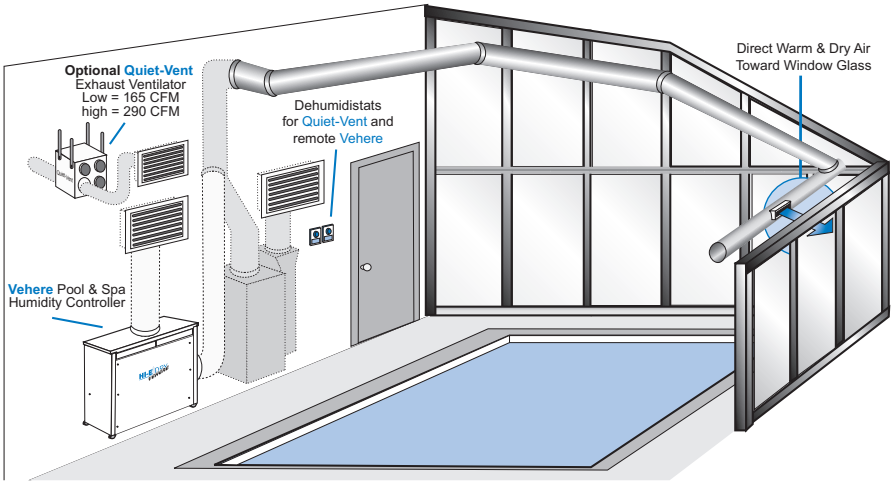

Figure 5: Installation in remote area with ducting.

3.2 Mounting The Remote Humidity Sensor/Controller

If the Vehere is to be located in a remote location outside the pool or spa area, mounting of the humidity sensor in the space to be conditioned is necessary. If the humidity sensor is not located in the conditioned space, the Vehere will not operate properly.

IMPORTANT: Locate the humidity element on an inside wall, free from drafts, out of direct sunlight, and where the element is not exposed to excessive vibration. Be careful not to drop the unit. Mount the wall mount element at a height of 4 to 6 feet (1.2 to 1.8 m) above the floor.

To mount the HI-E DRY Vehere dehumidistat on a wall for remote application, first remove the cover from the controller by lifting the side of the controller cover over the catch tabs on both sides. The cover comes off easily.

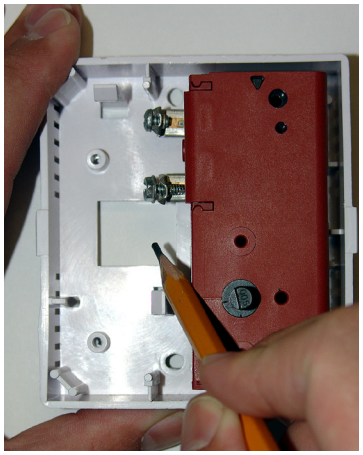

Figure 6: Mark mounting holes as indicated by arrows.

Figure 7: Control connection wires.

Hold the unit to the surface you would like to mount it on. You will need to mark the locations for two screw holes and one square knockout to accommodate wires and the devices wire guard. The wire-guard tabs fit inside the wall. (See Fig. 6, 7)

Once marked, drill a 1/8″ hole for each mounting screw location and tap the provided anchor mount into the hole. Use the provided screws to then mount the humidity control to the wall. Route the wiring through the hole you have created and connect wires according to the directions found in this manual. Replace plastic housing.

3.3 Electrical Requirements

The Vehere can be plugged into any grounded 20 Amp circuit. At 80°F, 60% RH, it draws 12 Amps. A dedicated 20 Amp circuit is recommended.

3.4 Condensate Removal

Condensate drains by gravity via the clear hose extending from the unit. Route the 4' drain hose to a floor drain. Use care to keep the hose as flat to the floor as possible. Keep the hose away from walk ways if possible. Excessive humps or kinks will prevent proper drainage. If the Vehere is located too far from a floor drain for the attached hose to reach, inexpensive 1/2" PVC pipe can be used to extend it. It is commonly available in 10' lengths from building supply, plumbing and hardware stores. It will slide tightly inside the end of the drain hose. If more than one length of pipe is required, they can be joined with a short piece cut from the end of the drain hose.

3.5 Ducting

3.5A Ducting kit

The factory installation kit includes two twelve-inch collars to allow ducting to be attached to the inlet and outlet of the Vehere. The 12″ collar with three tabs can be attached via the holes provided in the front of the unit, and the 12″ flanged collar can be affixed to the top opening. S (See Fig. 8)

Figure 8: Tabbed duct collar is installed around the exhaust outlet. The flanged duct collar is installed around the intake opening.

3.5B Ducting for Dehumidification

Ducting the Vehere as mentioned requires consideration of the following points:

The Vehere will require a single 12″ round or equivalent dedicated return from the pool room. The Vehere supply can be dedicated or tapped into a forced air system supply. A check damper should be used at the connections.

The warm/dry supply air should be washed over the windows at multiple drops for best results. Grills and diffusers or duct ends must not excessively restrict airflow.

Round flex duct can be purchased by ordering the following part numbers from the factory:

4020647	4″ Flex Duct	4″ x 25′
4020128	6″ Flex Duct	6″ x 25′
4020177	8″ Flex Duct	8″ x 25′
4022126	10″ Flex Duct	10″ x 25′
4024750	12″ Flex Duct	12″ x 25′

4. Operation

4.1 Humidity Sensor/Control

The control is an adjustable switch that closes when the relative humidity of the air it senses rises to the dial set point. It opens when the RH drops 4 to 6% below the set point. (See Fig. 9)

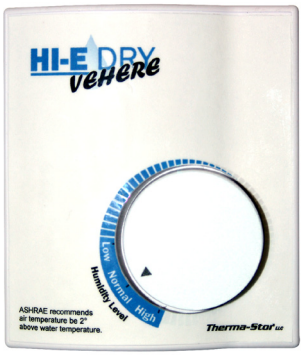

Figure 9: Vehere humidity sensor/ controller.

4.2 Humidity Control Adjustment

The dehumidifier will run until the desired relative humidity (RH) matches the control dial setting.

The humidity controller has been designed for simplicity of use. It is marked “Low”, “Normal” and “High.” These operational settings represent the amount of humidity in the air. Setting the control to the “Low” setting will result in a lower relative humidity than the “High” setting. We recommend setting the controller at the “Normal” setting and then adjusting as you see fit, moving the controller toward “Low” to lower the humidity and toward “High” to increase the level of humidity in your pool or spa area.

Approximate Humidity Levels Per Setting

“Low”	35% to 45% Relative Humidity
“Normal”	45% to 55% Relative Humidity (Recommended)
“High”	55% to 65% Relative Humidity

A quality humidity meter is recommended to accurately monitor humidity levels. For a quote on a quality humidity meter, contact customer service at 1-800-533-7533.

4.3 Fan Switch

Turning the fan switch ON will cause the unit’s internal blower to run continuously, whether the unit is dehumidifying or not. This function is desirable if the unit is used for air circulation or fresh air ventilation. (See Fig. 10)

Figure 10: Vehere fan switch.

4.4 Automatic Defrost Control

When the Vehere is used in a cool area, frost may form on the cooling coil as it dehumidifies. When frost forms, our automatic defrost thermostat will periodically turn off the compressor while allowing the blower to run. The blower draws air through the cooling coil and melts the frost. The defrost cycle is automatic and designed for optimum performance above 50°F.

4.5 Automatic Low Pressure Control

If the low side refrigerant pressure drops to 35 PSIG, the low pressure control opens and shuts off the compressor and blower. It is an automatic reset that will close when the pressure rises to 60 PSIG. This feature prevents damage to the compressor. It may also open if the unit is used in a cool area (below 50°F) or stored below 40°F and then started. Under these conditions, the unit will restart within several minutes.

5. Ventilation

WARNING: Do not use open combustion heating appliances (unless equipped with power exhaust) in a pool room equipped with exhaust fans. Under certain conditions these exhaust fans may cause the backdrafting of toxic combustion by-products which are hazardous to human health and could cause death. We strongly recommend using only closed combustion heating appliances.

5.1 Ventilation Recommendations

Ventilation is an important element of pool and spa dehumidification. A negative (exhaust) pressure ventilation system should be used. This ventilation system is operated and installed independently of the Vehere unit and keeps the concentrations of corrosive pool chemicals to a minimum and assists in keeping moisture from penetrating the rest of the structure. Ventilation should be sized to all local codes. It is best if the ventilation is a net negative in pressure.

6. Maintenance

6.1 Air Filter

The Vehere is equipped with two, 2" thick, pleated fabric air filters that must be checked regularly. Operating the unit with dirty filters will reduce the humidity controller's capacity and efficiency and may cause the compressor to cycle off and on unnecessarily on the defrost control. The filters can generally be vacuumed clean several times before needing replacement. Replacement filters can be ordered from the factory.

7. Service

WARNING: Only qualified service people should service this unit. The Vehere has a high-pressure refrigerant system and high voltage circuitry. This could present a hazard which could result in death, serious bodily injury, and/or property damage. Only qualified service people should service this unit.

7.1 Technical Description

The Vehere uses a refrigeration system to remove heat and moisture from incoming air, and add heat to the air it discharges. Hot, high-pressure refrigerant gas is routed from the compressor to the condenser coil. The refrigerant is cooled and condensed by giving up its heat to the air it discharges from the unit. The refrigerant liquid then passes through two capillary tubes, which cause the refrigerant pressure and temperature to drop. It next enters the evaporator coil where it absorbs heat from the incoming air and evaporates.

The evaporator operates in a flooded condition, which means it should always be full of liquid refrigerant during normal operation. A flooded evaporator should maintain constant pressure and temperature across the entire coil, from inlet to outlet. A mixture of gas and liquid refrigerant enter the accumulator after leaving the evaporator coil. The accumulator prevents any liquid refrigerant from reaching the compressor. The compressor removes the cool refrigerant gas from the accumulator and compresses it to a high pressure and temperature to repeat the process.

7.2 Troubleshooting

No dehumidification, neither blower nor compressor run with fan switch OFF.

1. Unit unplugged or no power to outlet.
2. Humidity control set too high or defective
3. Loose connection in internal wiring.
4. Open low pressure control

Dehumidification, blower runs continuously but compressor only runs sporadically with fan switch OFF.

1. Unit is in defrost cycle
2. Defrost thermostat defective or loose
3. Loose connection in compressor circuit
4. Defective compressor overload
5. Defective compressor
6. Defective relay

No dehumidification. Blower runs but compressor does not with fan switch OFF.

1. Bad connection in compressor circuit
2. Defective compressor capacitor
3. Defective compressor overload
4. Defective compressor
5. Defective relay

Blower does not run. Compressor runs briefly but cycles on & off.

1. Loose connection in blower circuit
2. Obstruction prevents impeller rotation
3. Defective blower

Unit removes some water but not as much as expected.

1. Air temperature and/or humidity have dropped.
2. Humidity meter and/or thermometer used are out of calibration.
3. Unit has entered defrost cycle
4. Air filter dirty
5. Defective defrost thermostat
6. Low refrigerant charge
7. Air leak such as loose cover.
8. Defective compressor
9. Restrictive ducting

Evaporator coil frosted continuously, low dehumidifying capacity.

1. Defrost thermostat loose or defective
2. Low refrigerant charge
3. Dirty air filters or airflow restricted.

7.3 Refrigerant Charging

WARNING: Only qualified service people should service this unit. The Vehere has a high-pressure refrigerant system and high voltage circuitry. This could present a hazard which could result in death, serious bodily injury, and/or property damage. Only qualified service people should service this unit.

If the refrigerant charge is lost due to service or a leak, a new charge must be accurately weighed in. If any of the old charge is left in the system, it must be removed before weighing in the new charge. Refer to the unit nameplate

for the correct charge weight and refrigerant type. Add the refrigerant through the low side service port. (See Fig. 11)

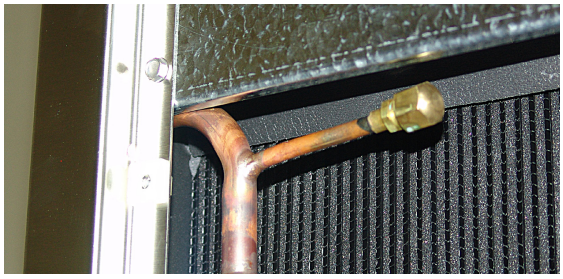

Figure 11: Low side service port.

7.4 Blower Replacement

The blower has a PSC motor internal thermal overload protection. If defective, the complete assembly must be replaced.

1. Unplug the power cord.
2. Remove the cabinet front.
3. If an outlet duct is connected to the unit, remove it.

4. Disconnect the blower leads: white from the compressor run capacitor, and black connected to the fan switch.
5. Remove the nuts & bolts holding the blower outlet flange to the cabinet end and remove the blower.
6. Reassembling with the new blower is the above procedure reversed.

7.5 Relay

The contacts of the single pole, single throw relay complete the power circuit to the compressor. The contacts are closed when power is provided to the relay coil via the control circuit. The control circuit includes the humidity control, low pressure control, defrost thermostat and timer.

8. Vehere Accessories

Part No.	Item
4025283	Vehere Remote Humidity Sensor/Control
4021799	Filter (2 Filters Required)
4024750	12″ x 25′ Flext Duct

Optional Ventilator

4019663	Quiet-Vent Exhaust Ventilator

9. Wiring Diagram

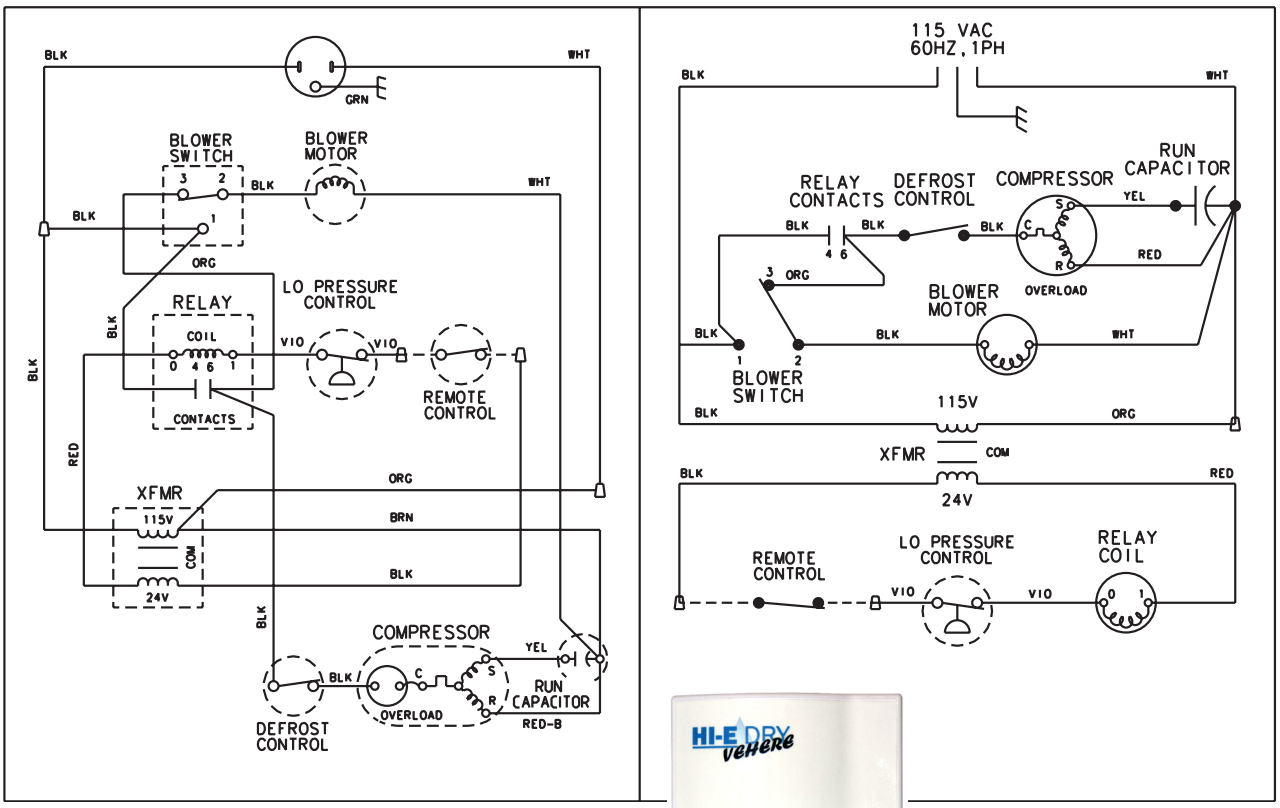

Figure 12: Vehere wiring diagram.

10. Service Parts: HI-E Dry Vehere Dehumidifier

ITEM	PART NO.	QTY.	DESCRIPTION
1	4021083	1	Blower with Capacitor
2	4033032-06	1	Capacitor, Run, 50MFD, 370v
3	4021589	2	Capillary Tubes
4	4023604	4	Caster, 2", Plastic, Swivel
5	4028246	1	Coil, Condenser
6	4028245-02	1	Coil, Evaporator E-Coat
7	4030131	1	Compressor
	4030121	1	Compressor Overload
8	4029508	1	Control, Low Pressure
9	4025278	1	Cord & Wire Harness
10	4025741	1	Defrost Thermostat
	4021648	1	Defrost Thermostat Mounting Clip
11	4021799	2	Filter, Air (2" X 16" X 16"), (Grainger P/N 6B958)
12	4025087	1	Filter/Drier
13	4021626	1	Hose Drain .56" x 8'
15	4025283	1	Humidity Controller, Cabinet Mounted
	4021495	1	Knob
16	1096010	6	Machine Screw, Stainless Steel, ¼-20 X 1" (for Front Cover)
17	4022484	1	Relay, SPDT, 24 Volt
18	4023549	6	Self-Retaining Nut, ¼-20
19	4020988	1	Service Valve Assembly w/ Core & Cap
20	4025560	1	Switch, SPDT, On-Off, for Fan
21	4021818	1	Accumulator
	4025277	1	Wiring Diagram (NS)
	4022487	1	24 Volt Transformer

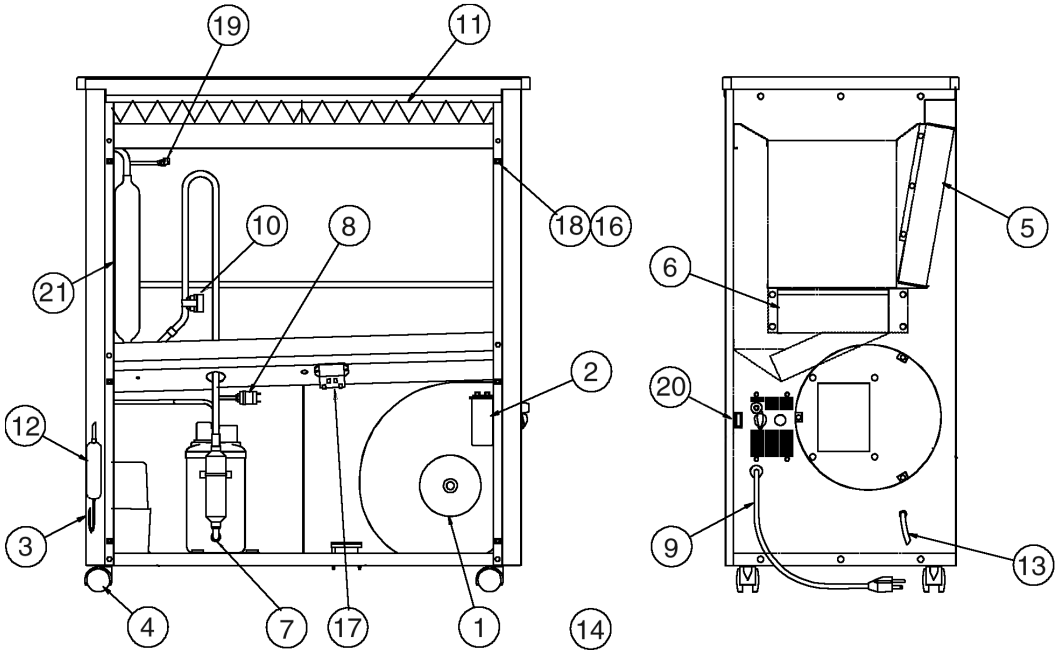

HI-E *Dry* Vehere Dehumidifier Limited Warranty

Warrantor:

Therma-Stor LLC

4201 Lien Rd

Madison, WI 53704

Telephone: 1-800-533-7533

WARRANTY: This warranty covers the HI-E Dry Vehere.

Year One - 100% parts and labor (all components)

Year(s) Two through Five - The condenser, evaporator and compressor of the HI-E Dry Vehere will operate free of any defects in material or will repair or replace the defective part(s).

If a defect in materials or workmanship occurs within the warranty period, Therma-Stor LLC will repair or replace the defect.

USER RESPONSIBILITIES: Warranty service must be performed by a servicer authorized by Therma-Stor LLC. To obtain warranty service you must obtain a return material authorization (RMA). To obtain an RMA you must present proof of purchase or (lease), by use of a warranty card, original sales receipt or other reasonable and reliable means.

To obtain an RMA call Therma-Stor LLC at the above number and ask for the Therma-Stor LLC Service Department, which will then issue an RMA# and arrange for, at our option, either repair or replacement.

FREIGHT: Freight to and from the servicer is the responsibility of the end-user. The end-user is responsible for normal care and proper return packaging.

LIMITATIONS AND EXCLUSIONS: This warranty does not cover any defect, malfunction, etc. resulting from misuse, abuse, lack of normal care, corrosion, freezing, tampering, modification, unauthorized or improper repair or installation, accident, acts of nature or any other cause beyond Therma-Stor LLC's reasonable control.

If any HI-E Dry Vehere part is repaired or replaced, the new part shall be warranted for the balance of original warranty (but all warranty periods will be extended by the period of time, if any, that the Vehere is out of service while awaiting covered warranty service).

Warranty service will be performed during normal working hours.

UPON THE EXPIRATION OF THE WRITTEN WARRANTY APPLICABLE TO THE HI-E DRY Vehere OR ANY PART THEREOF, ALL OTHER WARRANTIES IMPLIED BY LAW, INCLUDING MERCHANTABILITY AND FITNESS FOR A PARTICULAR PURPOSE, SHALL ALSO EXPIRE. ALL WARRANTIES MADE BY THERMA-STOR LLC ARE SET FORTH HEREIN, AND NO CLAIM MAY BE MADE AGAINST THERMA-STOR BASED ON ANY ORAL WARRANTY. IN NO EVENT SHALL THERMA-STOR LLC, IN CONNECTION WITH THE SALE, INSTALLATION, USE, REPAIR OR REPLACEMENT OF ANY HI-E DRY Vehere OR PART THEREOF BE LIABLE UNDER ANY LEGAL THEORY FOR ANY SPECIAL, INDIRECT OR CONSEQUENTIAL DAMAGES INCLUDING WITHOUT LIMITATION WATER DAMAGE (THE END USER SHOULD TAKE PRECAUTIONS AGAINST SAME), LOST PROFITS, DELAY, OR LOSS OF USE OR DAMAGE TO ANY REAL OR PERSONAL PROPERTY.

Some states do not allow limitations on how long an implied warranty lasts, and some do not allow the exclusion or limitation of incidental or consequential damages, so one or both of these limitations may not apply to you.

LEGAL RIGHTS: This warranty gives you specific legal rights, and you may also have other rights which vary from state to state.